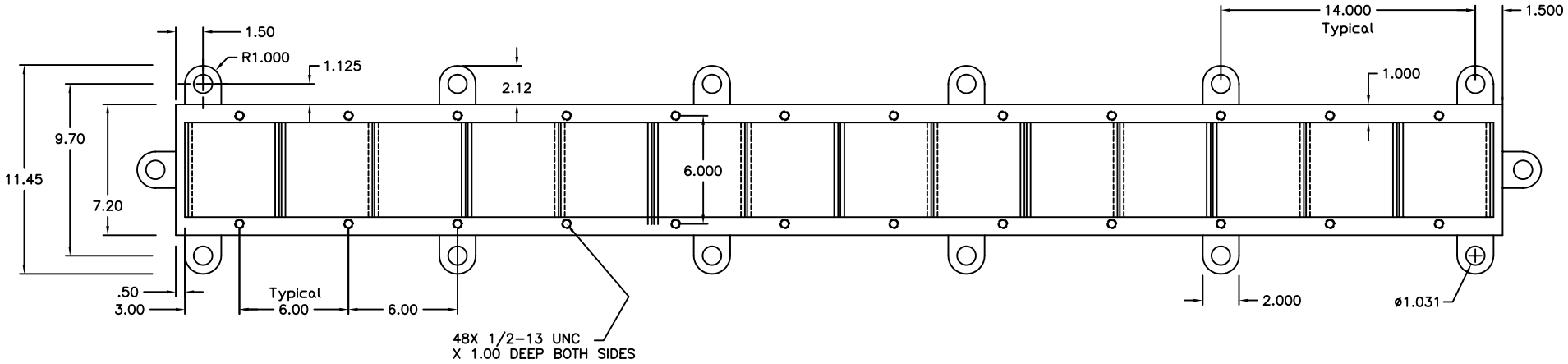

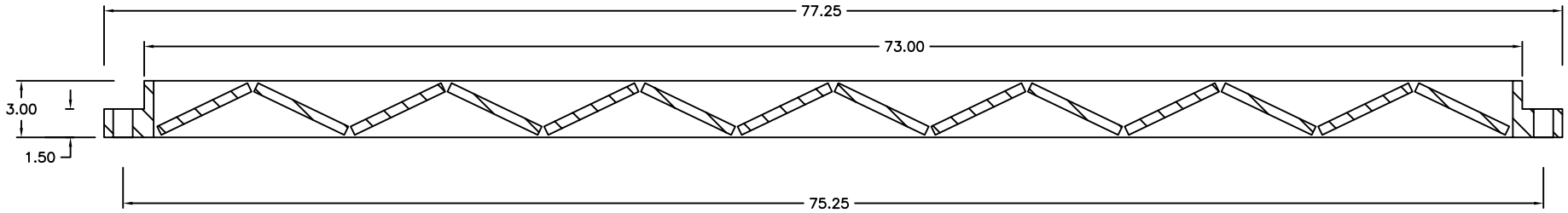

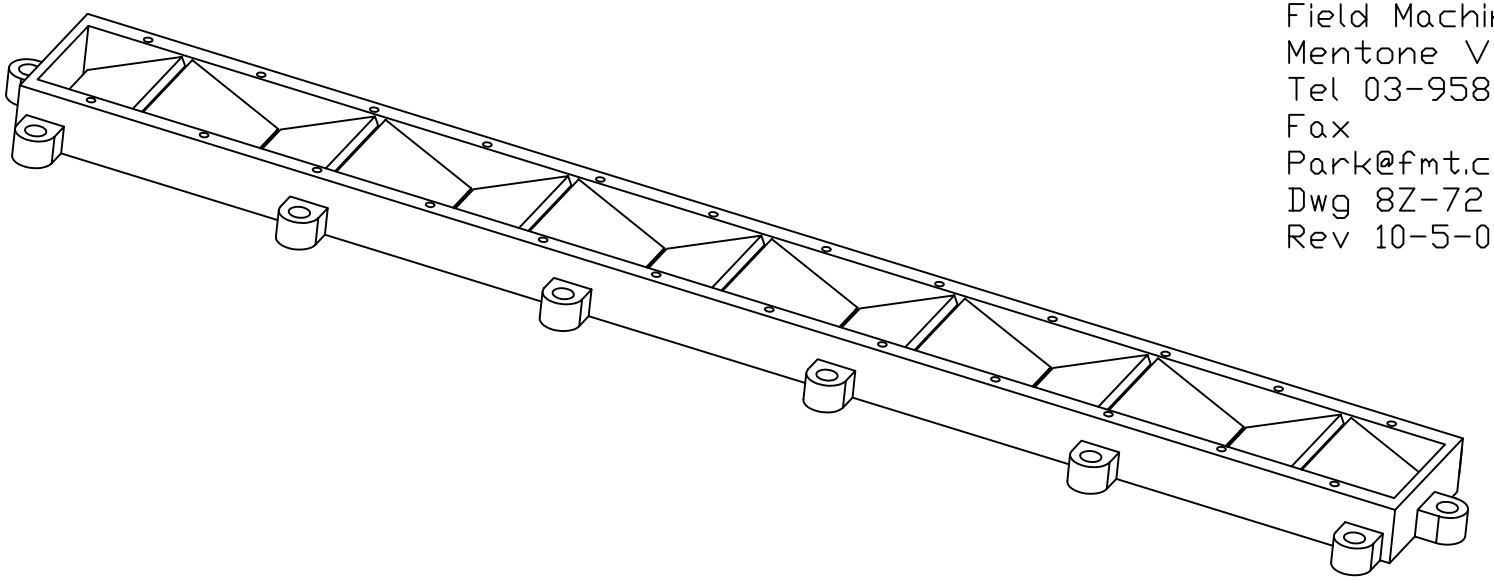

Field Machine Tools
Mentone Vic Australia
Tel 03-9585-7333
Fax 7355
Park@fmt.com.au
Dwg 8Z-72 parallell base
Rev 10-5-04